Service Manual

OB-X

Polyphonic Synthesizer

First Edition
September 1979

Oberheim Electronics, Inc.
1455 19th Street
Santa Monica, Ca 90404

CALIBRATION PROCEEDURES

- Control Board Calibration
- Voice Card Replacement and Calibration
- Power Supply Calbiration
- Mother Board Calibration

DIAGRAMS

- Wiring Block Diagram
- Sub-Assembly and Connector Placement Diagram
- Control Board and Voice Card Trimmer Placement Diagram
- Power Supply and Mother Board Trimmer Placement Diagram

SCHEMATICS

- Power Supply Schematic
- Processor, Control, Pots and Keyboard Schematic (4 Sheets)
- Mother Board Schematic
- Voice Card Schematic
- Bend Assembly Schematic
- Rear Panel Schematic

PRINTED CIRCUIT COMPOSITES

- Control Board Composite
- Processor Board Composite
- Mother Board Composite
- Power Supply and Voice Card Composites

ENGINEERING CHANGE ORDERS (5 Sheets)

INTERCONNECT LISTS

- Control Board Interconnect List
- Power Supply Board Interconnect List
- Pot Board Interconnect List
- Mother Board Interconnect List

This document describes the procedure for calibrating the OB-X Control board. The following equipment is required:

Digital voltmeter (4 1/2 digits minimum)
Oscilloscope
Audio amplifier with speaker or headphones
(Note: Headphones may be plugged directly into the OB-X providing they are wired monophonically and have an input impedance of at least 600 ohms.)

This procedure makes reference to notes C0 through C4. C0 is low C on the keyboard, and C4 is high C. Refer to the Control Board and Voice Card Trimmer Placement Diagram for locations of trimmers to be adjusted.

Set the following front panel controls as indicated:

Manual	-	On
Unison	-	On
Portamento	-	Minimum (full CCW)
VCO1 Frequency	-	Minimum (full CCW)
VCO2 Frequency	-	Minimum (full CCW)
VCO2 Detune	-	Center (LED off)
Volume	-	As desired

All voltage measurements should be referenced to ground at connector pin A8.

DAC CALIBRATION

Using the DVM, monitor KEYCV1 at connector pin M9. Depress key C0 and note the voltage; this is the offset voltage and it should be 0.000 v +/- 15 mv. Depress C1 and adjust trimmer T9 so that KEYCV1 is 1.000 v +/- 2 mv more than the offset voltage. Repeat this procedure for each octave (C2, C3, and C4) to obtain KEYCV1 voltages of 2.000 v, 3.000 v, and 4.000 v +/- 2 mv more than the offset.

BEND CIRCUIT CALIBRATION

Turn Unison off, and set the switches on the Bend assembly as follows:

Up Octave/Down Octave	-	Down Octave
Narrow/Broad	-	Broad
VCO2 Only/Both	-	Both

Monitor the voltage at pin 1 of the 324 at location A1, and adjust trimmer T4 for 0.000 v +/- 20 mv.

Measure the VCO1 Frequency control voltage, VCO1F, at connector pin N1. This voltage, which should be 0.000 v +/- 25 mv, is the Bend pot offset voltage. This offset voltage must be added to (or subtracted from) the voltages stated for the following Bend circuit adjustments; e. g., if the offset voltage is -20 mv, T1 would be adjusted for 0.980 v and T2 would be adjusted for -1.020 v.

Move the Bend lever fully towards the front of the unit, and adjust trimmer T1 for 1.000 v +/- 2 mv.

Move the Bend lever fully towards the rear of the unit, and adjust trimmer T2 for -1.000 v +/- 2 mv.

Set the Narrow/Broad switch to Narrow, move the Bend lever fully to the front, and adjust trimmer T3 to 0.167 v +/- 2 mv.

Set the Octave switch to its center position, and adjust trimmer T6 for 1.000 v +/- 2 mv.

Set the Octave switch to the Up position, and adjust trimmer T7 for 2.000 v +/- 2 mv.

LFO RATE CALIBRATION

Set the LFO Rate pot to maximum (full CW). Observe the triangle wave with an oscilloscope at pin 7 of the 324 at location A11, and adjust trimmer T5 to obtain a period of 50 +/- 5 msec.

PORTAMENTO CALIBRATION

Set the Portamento pot to maximum (full CW). While alternately playing two keys one octave apart, adjust trimmer T8 to obtain maximum portamento; i. e., the maximum time period for the oscillators to change from one pitch to the other after a key is depressed. With T8 adjusted for maximum portamento, this time period may be anywhere from 1 to 2 1/2 seconds for a one octave change, and the variation among voices may be as much as a 2 to 1 ratio between the shortest and longest periods.

This document describes the procedure for replacing and calibrating voice cards in the OB-X. The following equipment is necessary for calibration:

Digital voltmeter (3 1/2 digits minimum)
Oscilloscope (optional)
Audio amplifier with speaker or headphones
(Note: Headphones may be plugged directly into the OB-X provided they are wired monophonically and have an input impedance of at least 600 ohms.)

This procedure makes reference to notes C0 through C4. C0 is low C on the keyboard, and C4 is high C. Refer to the Control Board and Voice Card Trimmer Placement Diagram for locations of the trimmers to be adjusted.

VOICE CARD REPLACEMENT AND PRELIMINARY CONTROL SETTINGS

Locate the defective voice card, and replace it with a new card.

CAUTION: A.C. POWER MUST BE OFF DURING CARD REMOVAL AND REPLACEMENT.

As an aid in determining which card in a unit is defective, it should be realized that touching the "tempco" resistors (refer to the Trimmer Placement Diagram) on a voice card which is gated on will cause a significant change in pitch of the oscillators on that card. With Unison off, a defective card can thus be located by stepping through the voices, using the keyboard, until the defective voice is gated on. While holding this voice on, touch the tempco resistors on each card until a pitch change is heard, thus identifying the bad card.

With a new voice card installed, close the cover, turn on power, and wait 15 minutes to allow the unit to warm up. Plug the amplifier or headphones into the Left Output jack. Set the following switches and controls as indicated:

Manual - On
Unison - On
Volume - As desired
Master Tune - Center (dead zone)
Test 1 - Down (the Test switches are located inside the unit at the bottom of Pot Board No. 2)
Set the Pan pots on the Mother Board to full Left (full CCW) position for the new voice and for one known, calibrated voice to be used as a reference; set all other Pan pots to full Right. (Refer to the Power Supply & Mother Board Trimmer Placement Diagram for locations of the Pan pots.)

VCO1 CALIBRATION

Initial Frequency Adjustment

Set switches and controls as follows:

VCO1	-	On
VCO2	-	Off
VCO1 Waveform	-	Pulse
VCO2 Waveform	-	Pulse
VCO2 Detune	-	Center (LED off)
Filter Frequency	-	Maximum (full CW)
Loudness Sustain	-	Center or more CW

All other parameters not otherwise set - Full CCW or Off

Hold note C3 and adjust trimmer T4 until the frequency of the new voice is beatless with the refernce voice.

> NOTE: The following two adjustments, Volt/Octave and Hi-Track, are performed at the factory and normally do not require readjustment upon installation of the card in a unit. However, they should be performed if the voice does not sound right after the rest of the adjustment procedure has been performed.

Volt/Octave Adjustment

Hold note C0 and adjust trimmer T8 until the voice is beatless with the reference. Hold note C3 and determine if still beatless; if not, repeat the Initial Frequency adjustment. It is sometimes necessary to repeat the Initial Frequency and Volt/Octave adjustments a few times in order to obtain proper tracking of the voice card to the keyboard.

Hi-Track Adjustment

Hold note C5 and adjust trimmer T5 until beatless. Recheck the Initial Frequency and Volt/Octave adjustments, and repeat if necessary.

Pulse Width Adjustment

Set the Pulse Width pot on the front panel to full CCW, and adjust trimmer T6 for a 50% duty cyle. If an oscilloscope is available, the voice output can be monitored at connector pin G2; if the adjustment is being made by ear, adjust T6 for the most "hollow" sound. (The reference voice can be eliminated during this adjustment by turning its Pan pot fully CW.)

VCO2 CALIBRATION

VCO2 is calibrated by repeating the above procedure, with VCO1 off and VCO2 on, and adjusting the following trimmers:

Initial Frequency	-	T1
Volt/Octave	-	T7
Hi-Track	-	T2
Pulse Width	-	T3

FILTER CALIBRATION

Set the front panel controls and switches as follows:

VCO1	-	Off
VCO2	-	Off
Noise	-	Full
KBD Track	-	On
Filter Frequency	-	Minimum (full CCW)
Modulation	-	Minimum (full CCW)
Resonance	-	Maximum (full CW)

Initial Frequency Adjustment

Hold note C3 and, using the Pan pots to control the audio, listen to the two voices (new card and reference) alternately. Adjust trimmer T9 to tune the card being calibrated to the same pitch as the reference.

Volt/Octave Adjustment

Hold note C2 and adjust trimmer T10 until the voice is the same pitch as the reference. Hold note C3 and check the Initial Frequency adjustment; repeat these two adjustments as necessary. Hold note C4 and again adjust trimmer T10 until the two voices have the same pitch. Recheck the Initial Frequency at C3 and readjust as necessary. (Note: the filter will track the keyboard over only an approximately three octave range.)

VCA OFFSET

With both oscillators off, gate the voice on (depress any key). Measure the voltage at pin 6 of the TL081 at location A17 with a DVM, and adjust trimmer T11 for 0.000 v +/- 10 mv.

CAUTION: AT THE CONCLUSION OF THIS PROCEDURE
BE SURE TO DO THE FOLLOWING:

TURN OFF THE TEST 1 SWITCH (SET TO THE UP POSITION)

RETURN THE PAN POTS TO THEIR ORIGINAL POSITIONS

ON 6- AND 8-VOICE UNITS, RECONNECT THE CABLES TO MOTHER BOARD NO. 2 AND REINSTALL THE RETAINING SCREWS

This document describes the procedure for calibrating the OB-X Power Supply board. The only two voltages requiring calibration are +19 v and -19 v; all other voltages are developed by 3-terminal regulators having no adjustment capability.

Using connector pin F2 as the ground reference, monitor the voltage on pin F1 and adjust trimmer T102 for +19.0 v +/- 200 mv. Monitor the voltage at pin F4 and adjust trimmer T101 for -19.0 v +/- 200 mv.

The other voltages generated on the Power Supply board should also be checked to assure that they are within tolerance, as follows:

E1	- 5.0 v +/- 250 mv	-5.05
E3	+12.0 v +/- 600 mv	-0.64
E4	+ 4.8 v +/- 250 mv	4.49
E6	+ 5.0 v +/- 250 mv	5.05
E7	+15.0 v +/- 750 mv	-1.03
E9	-15.0 v +/- 750 mv	-15.04

Note: Pin E4 should measure a minimum of 2.3 v with power off (this is the backup battery voltage for the program memory).

-20

0.09

This document describes the procedure for calibrating the OB-X Mother board. Calibration consists of adjusting the two distortion trimmers, T201 and T202. For this procedure the front panel Volume pot must be set to maximum (full CW), and no keys on the keyboard should be depressed.

Using a DVM, monitor the output (pin 6) of the final TL081 in the right channel and adjust trimmer T201 for 0.00 v +/- 20 mv. Repeat this procedure for the left channel, adjusting trimmer T202.

As an alternative, an audio method of calibration can be used. Plug an amplifier with a speaker or headphones into the Right Output jack, hold down the Auto Tune switch on the front panel, and adjust T201 for minimum loudness of the "thump". Repeat for the left channel.

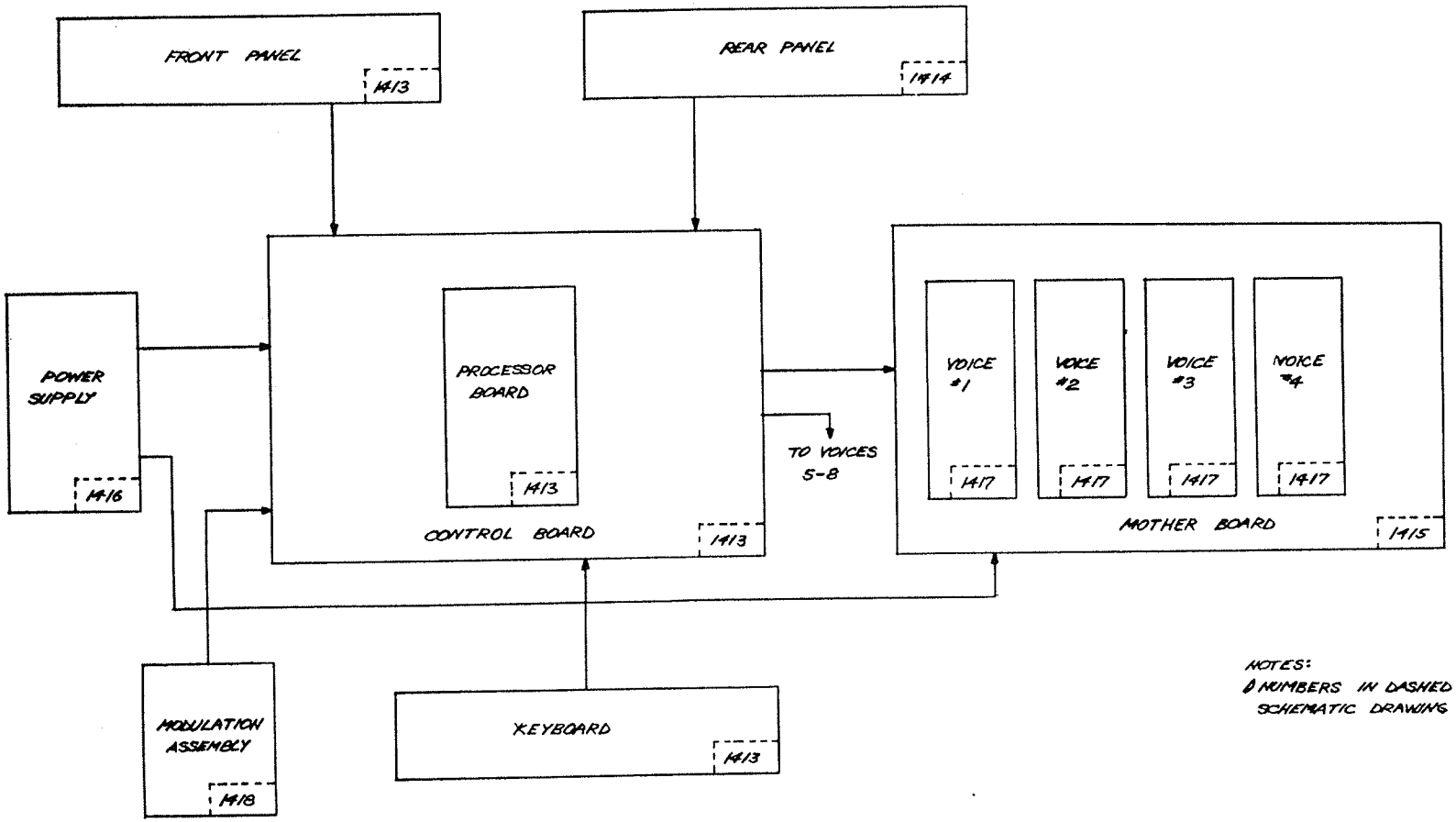

NOTES:
∅ NUMBERS IN DASHED BLOCKS INDICATE SCHEMATIC DRAWING NUMBERS

OBERHEIM ELECTRONICS, INC.

OB-X WIRING BLOCK DIAGRAM

9-7-79

1423

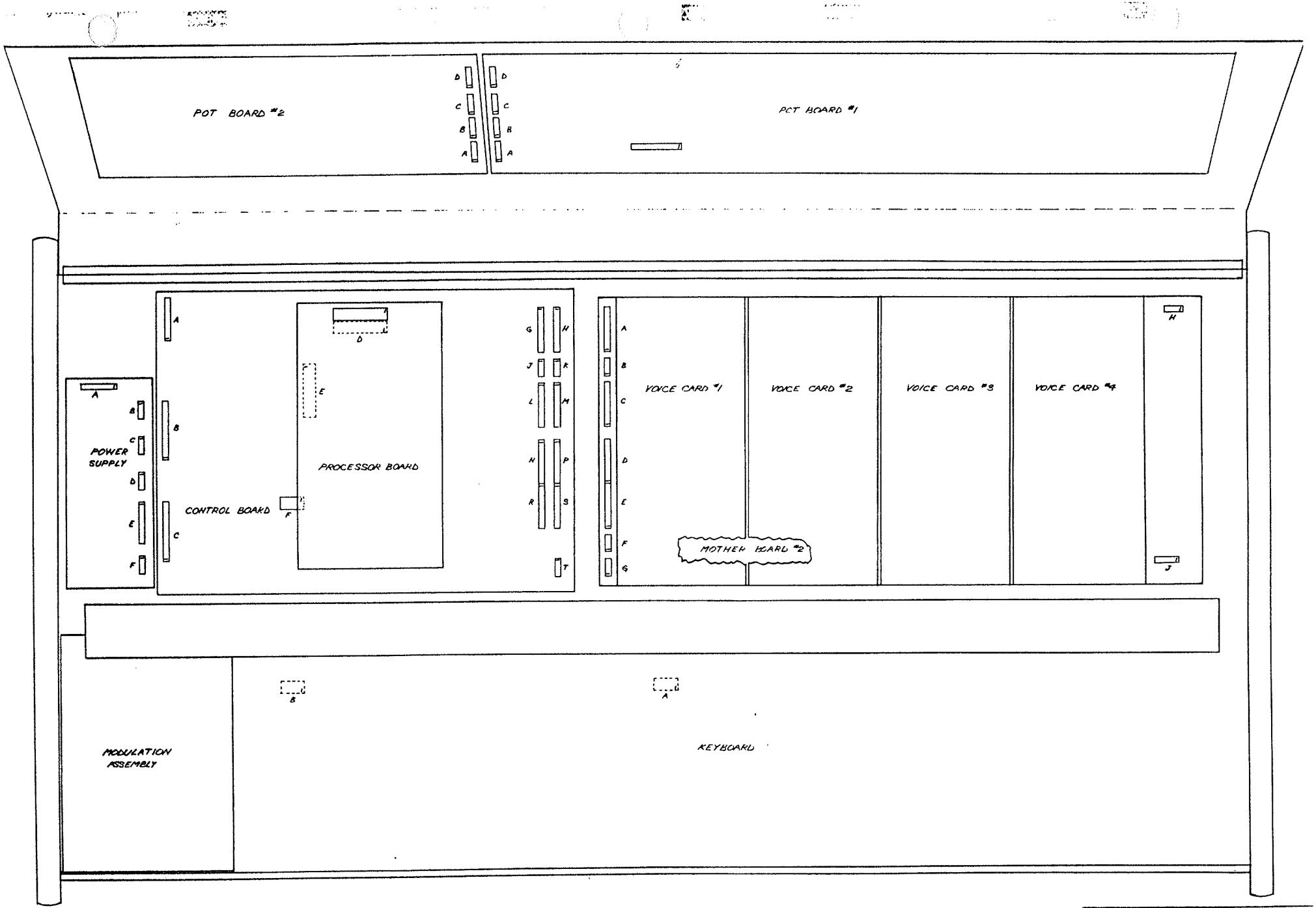

NOTE: MOTHER BOARD #2 & VOICES #5 THRU #8 NOT SHOWN

OBERHEIM ELECTRONICS, INC.

OB-X SUB-ASSEMBLY & CONNECTOR PLACEMENT DIAGRAM

9-17-79

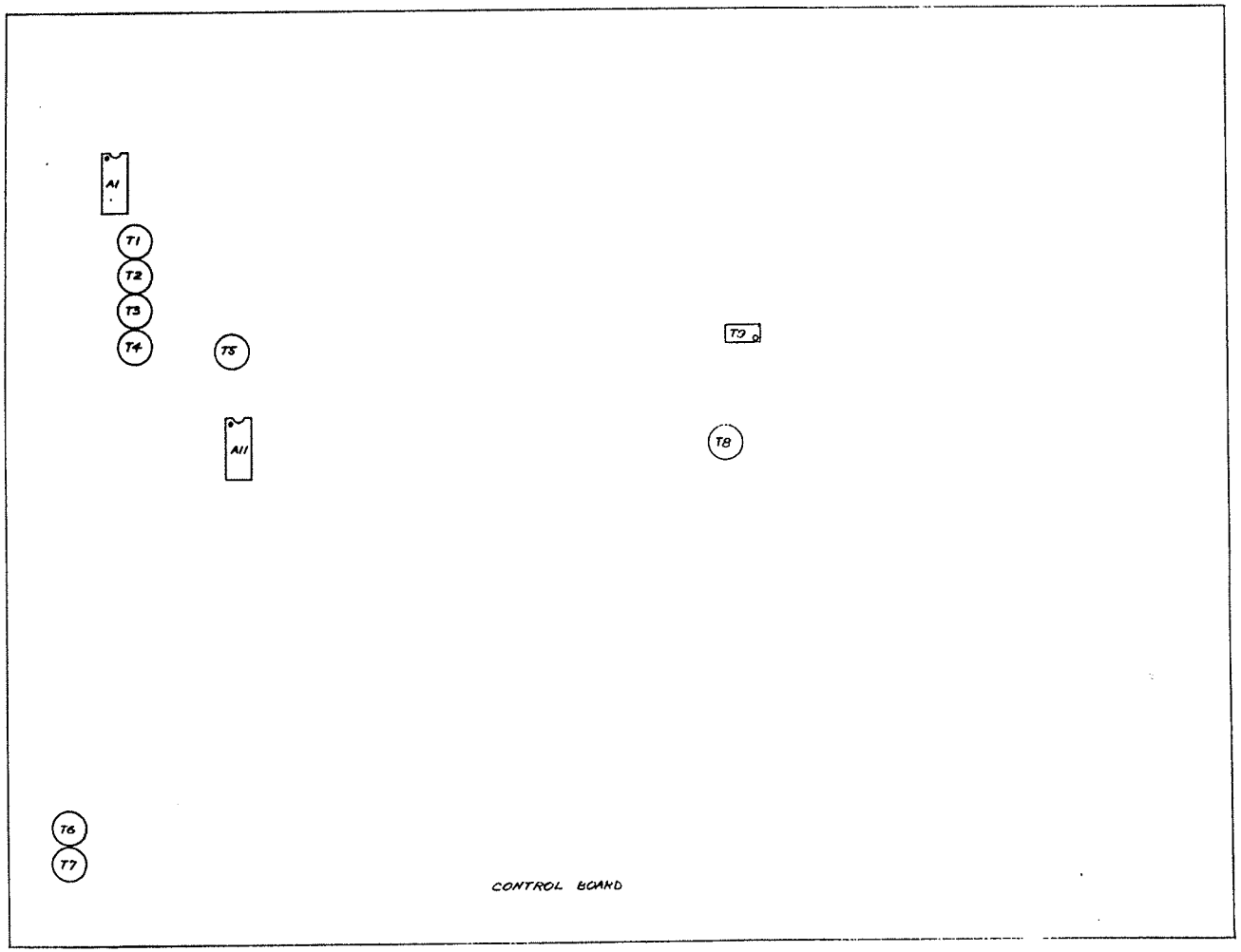

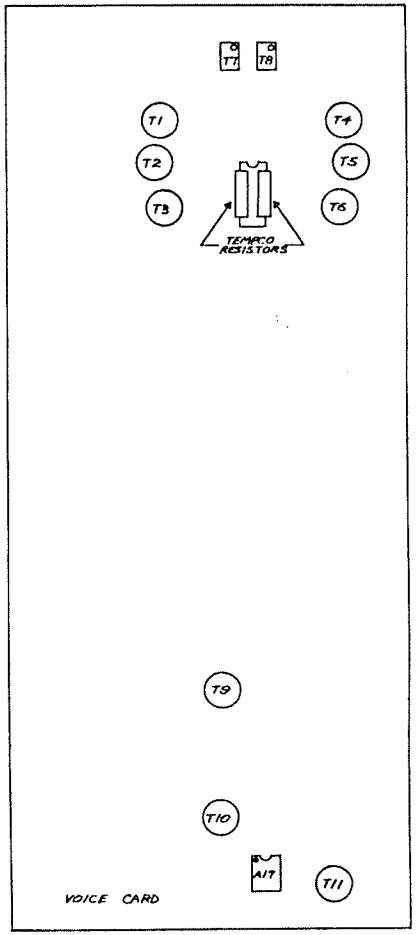

OBERHEIM ELECTRONICS, INC.

OH-X CONTROL BOARD & VOICE CARD
TRIMMER PLACEMENT DIAGRAM

9-19-79

1425

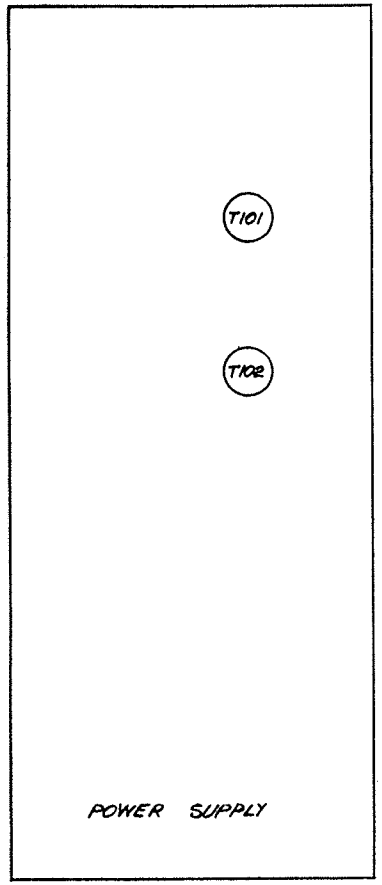

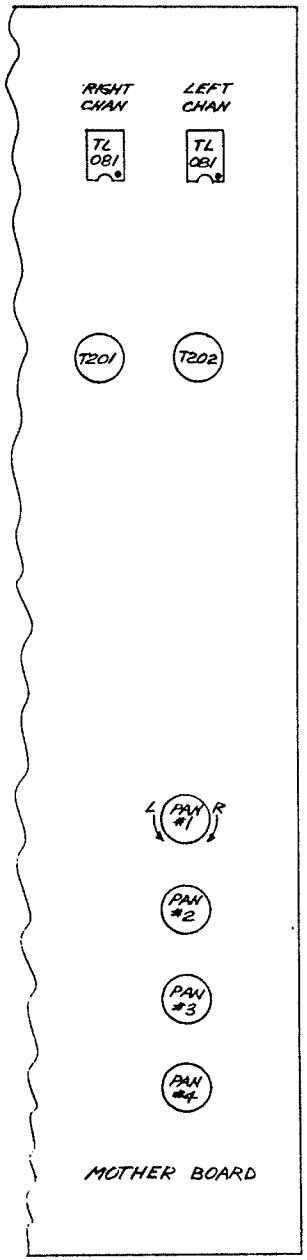

OBERHEIM ELECTRONICS, INC.

OB-X POWER SUPPLY & MOTHER BOARD
TRIMMER PLACEMENT DIAGRAM

9-19-79

1426

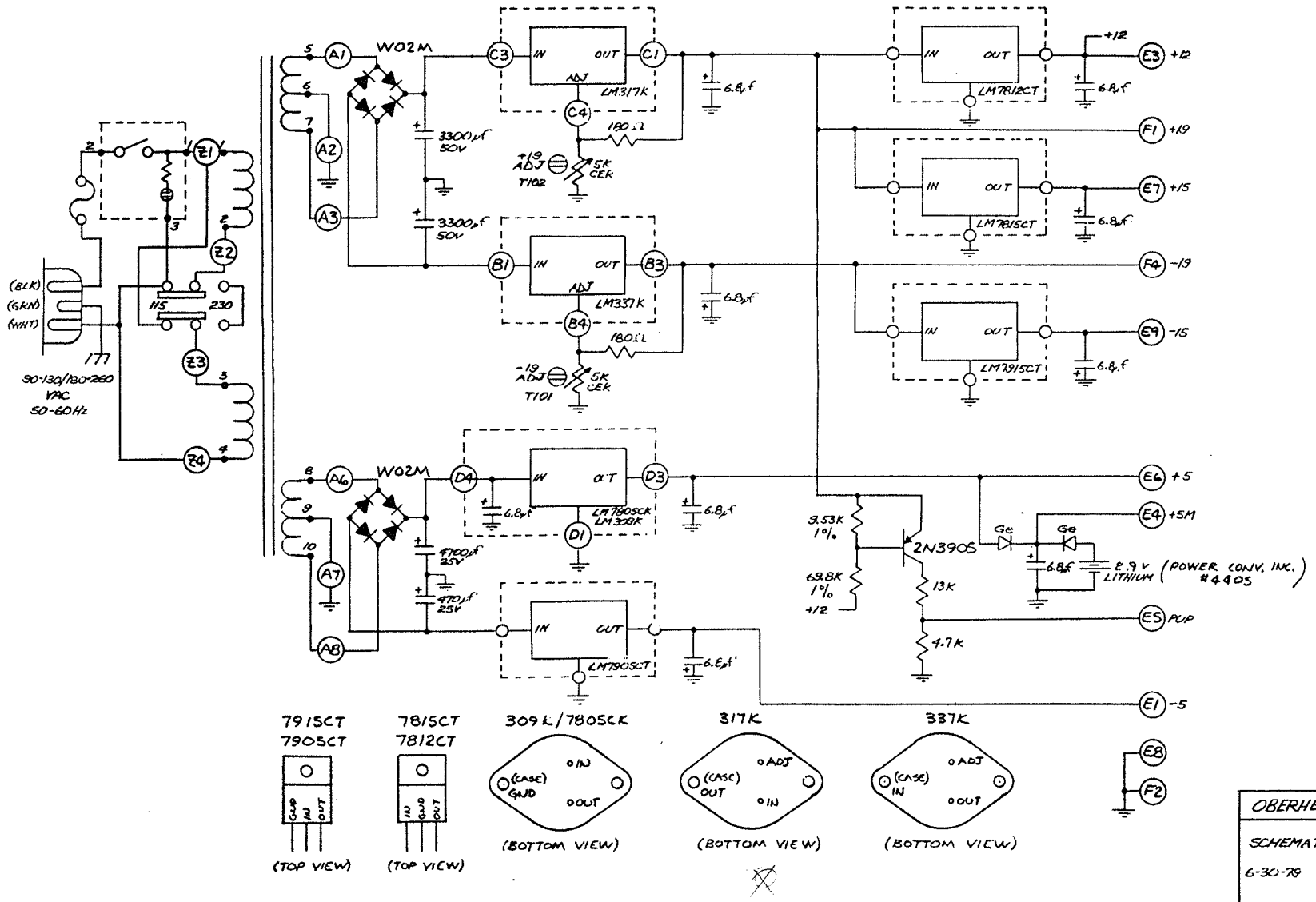

OBERHEIM ELECTRONICS, INC

SCHEMATIC – OB-X POWER SUPPLY

6-30-79

1416

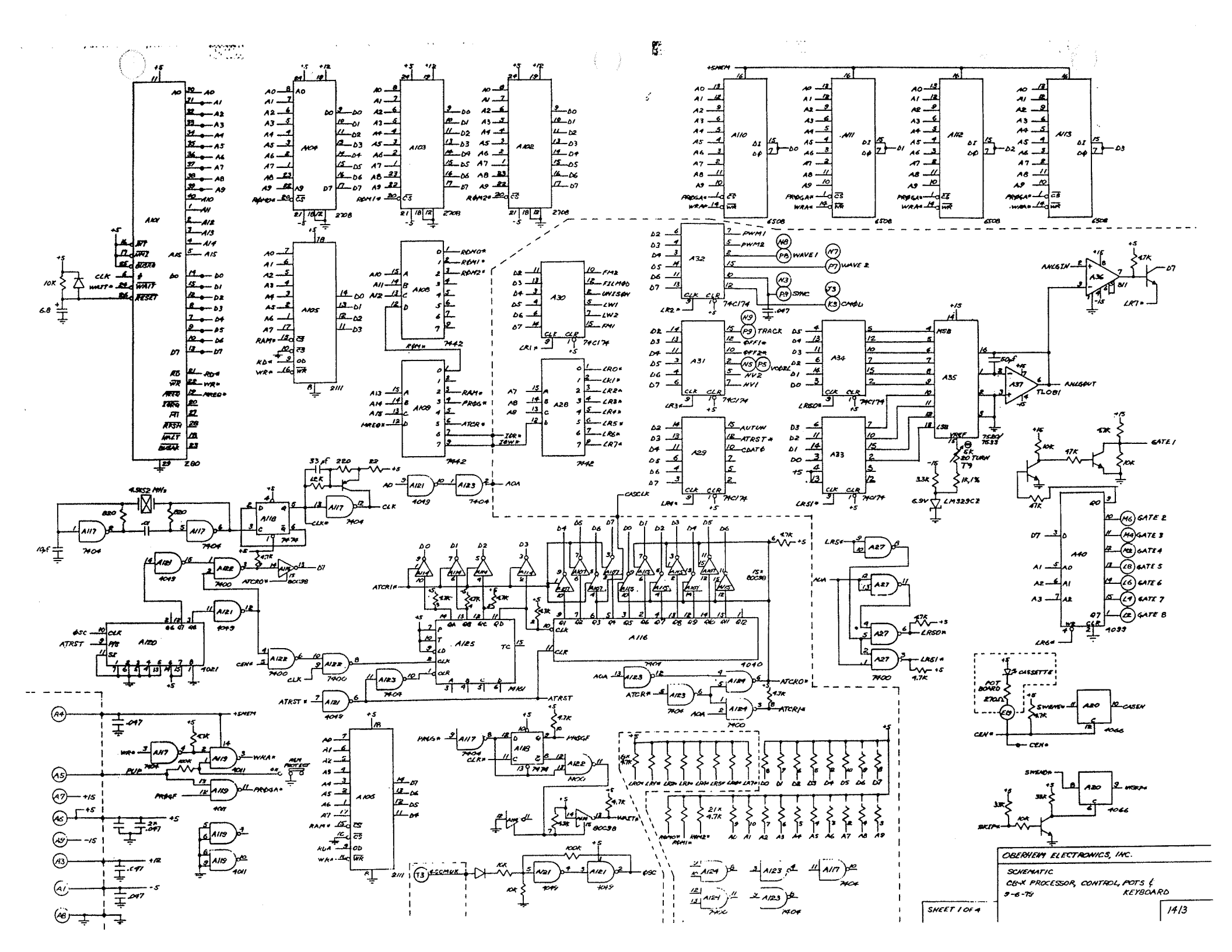
OBERHEIM ELECTRONICS, INC.
SCHEMATIC
OB-X PROCESSOR, CONTROL, POTS & KEYBOARD
9-6-79
SHEET 1 OF 4
14/3

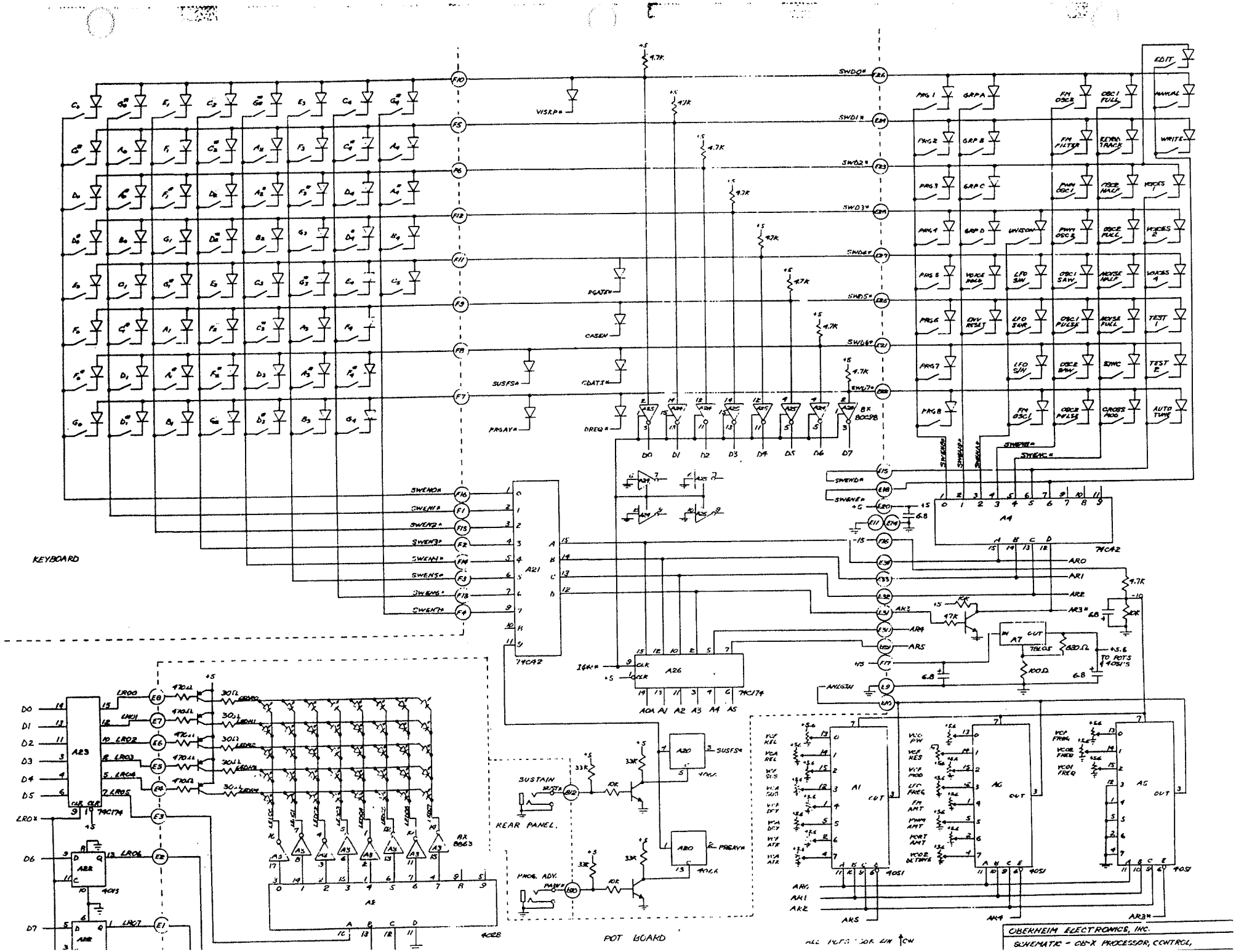
KEYBOARD
REAR PANEL
POT BOARD
OBERHEIM ELECTRONICS, INC.
SCHEMATIC - OB-X PROCESSOR, CONTROL,

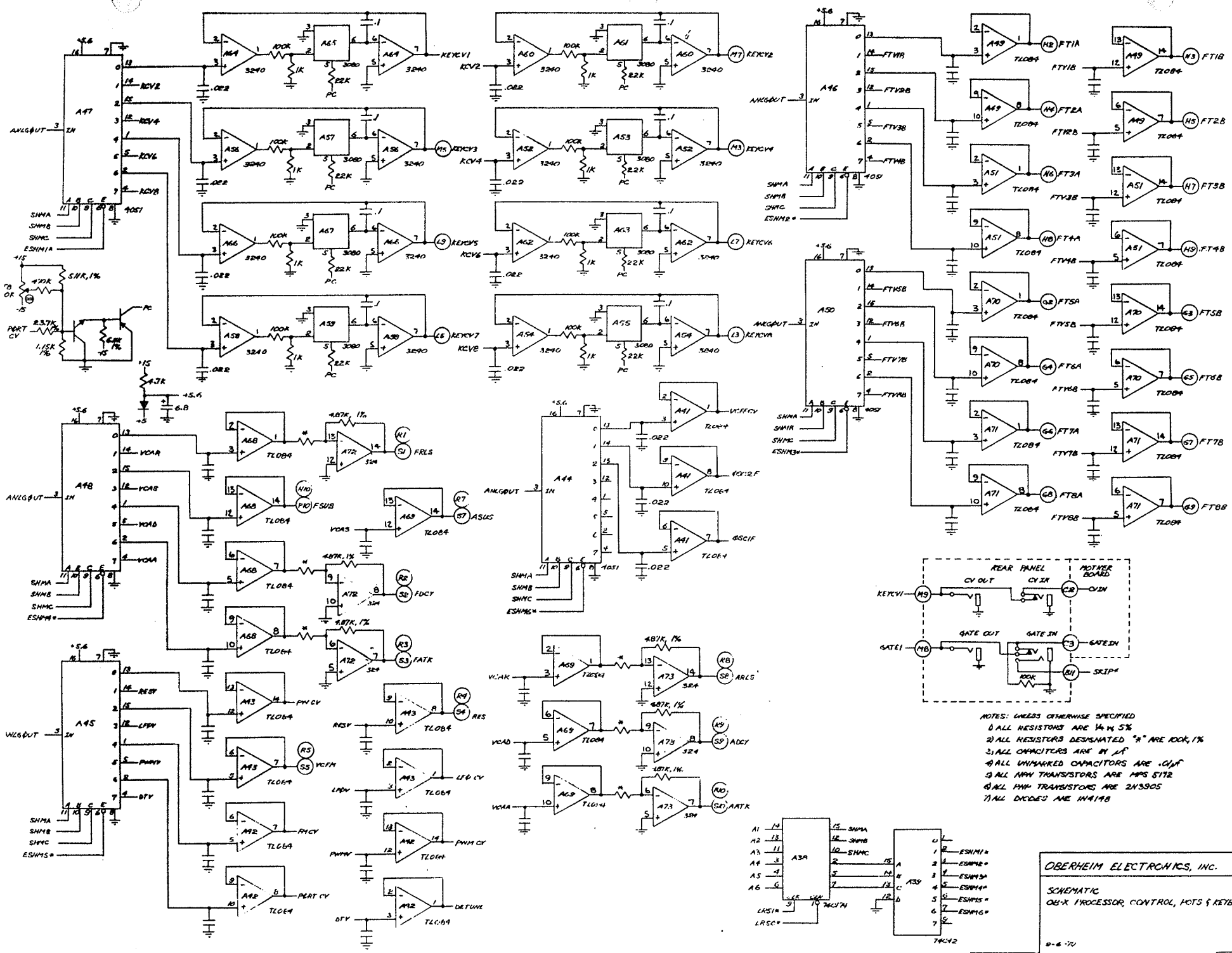

NOTES: UNLESS OTHERWISE SPECIFIED
1) ALL RESISTORS ARE 1/4 W, 5%
2) ALL RESISTORS DESIGNATED "*" ARE 100K, 1%
3) ALL CAPACITORS ARE IN µf
4) ALL UNMARKED CAPACITORS ARE .01µf
5) ALL NPN TRANSISTORS ARE MPS 5172
6) ALL PNP TRANSISTORS ARE 2N3905
7) ALL DIODES ARE 1N4148

OBERHEIM ELECTRONICS, INC.

SCHEMATIC
OB-X PROCESSOR, CONTROL, POTS & KEYBOARD

9-6-70

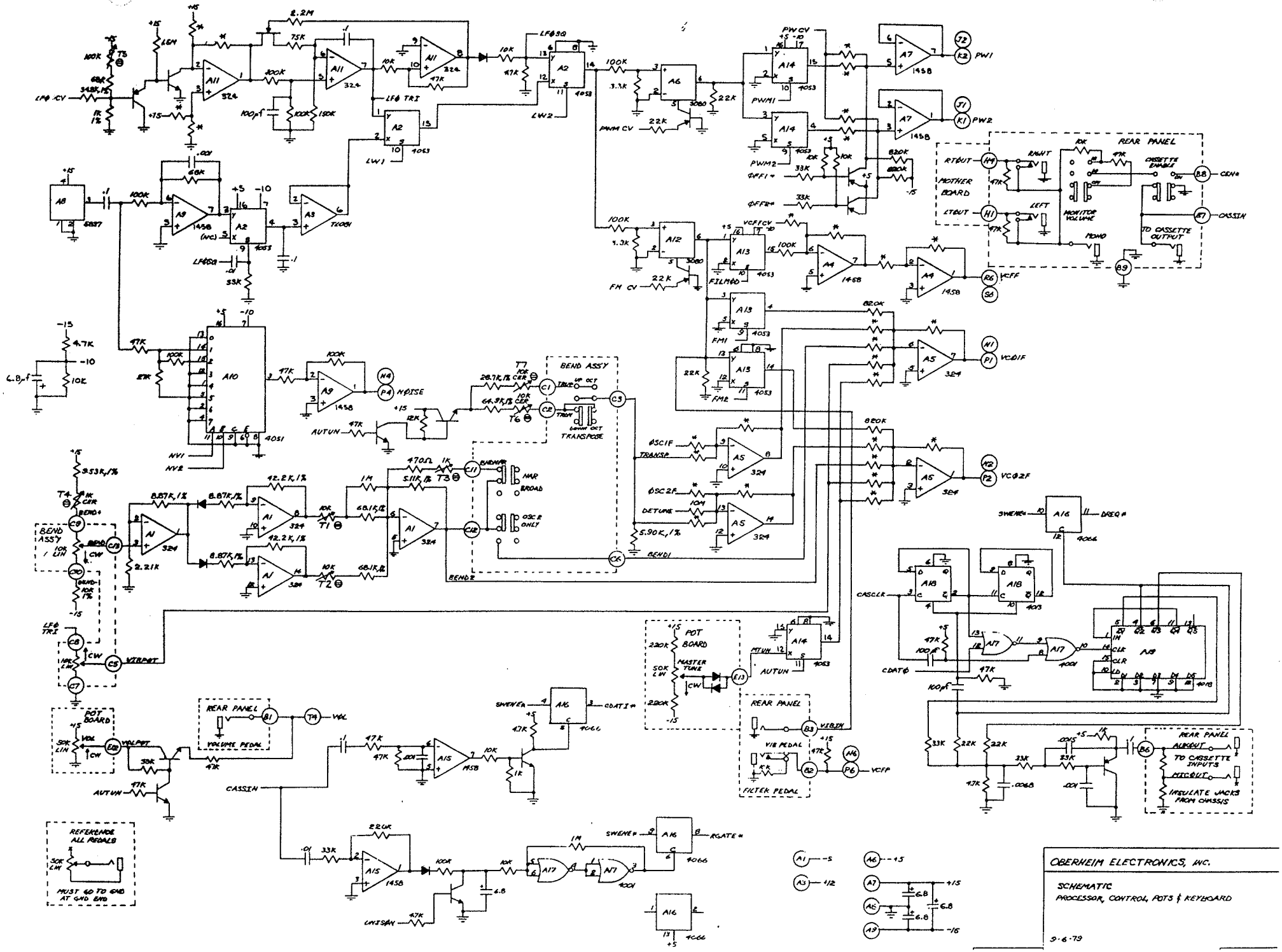

REAR PANEL
MOTHER BOARD
MONITOR VOLUME
TO CASSETTE OUTPUT
CASSETTE ENABLE
BEND ASSY
TRANSPOSE
POT BOARD
MASTER TUNE
REAR PANEL
VOLUME PEDAL
REAR PANEL
VIB PEDAL
FILTER PEDAL
REAR PANEL
TO CASSETTE INPUTS
INSULATE JACKS FROM CHASSIS
REFERENCE ALL PEDALS
MUST GO TO GND AT GND END
OBERHEIM ELECTRONICS, INC.
SCHEMATIC
PROCESSOR, CONTROL, POTS & KEYBOARD
9-6-79

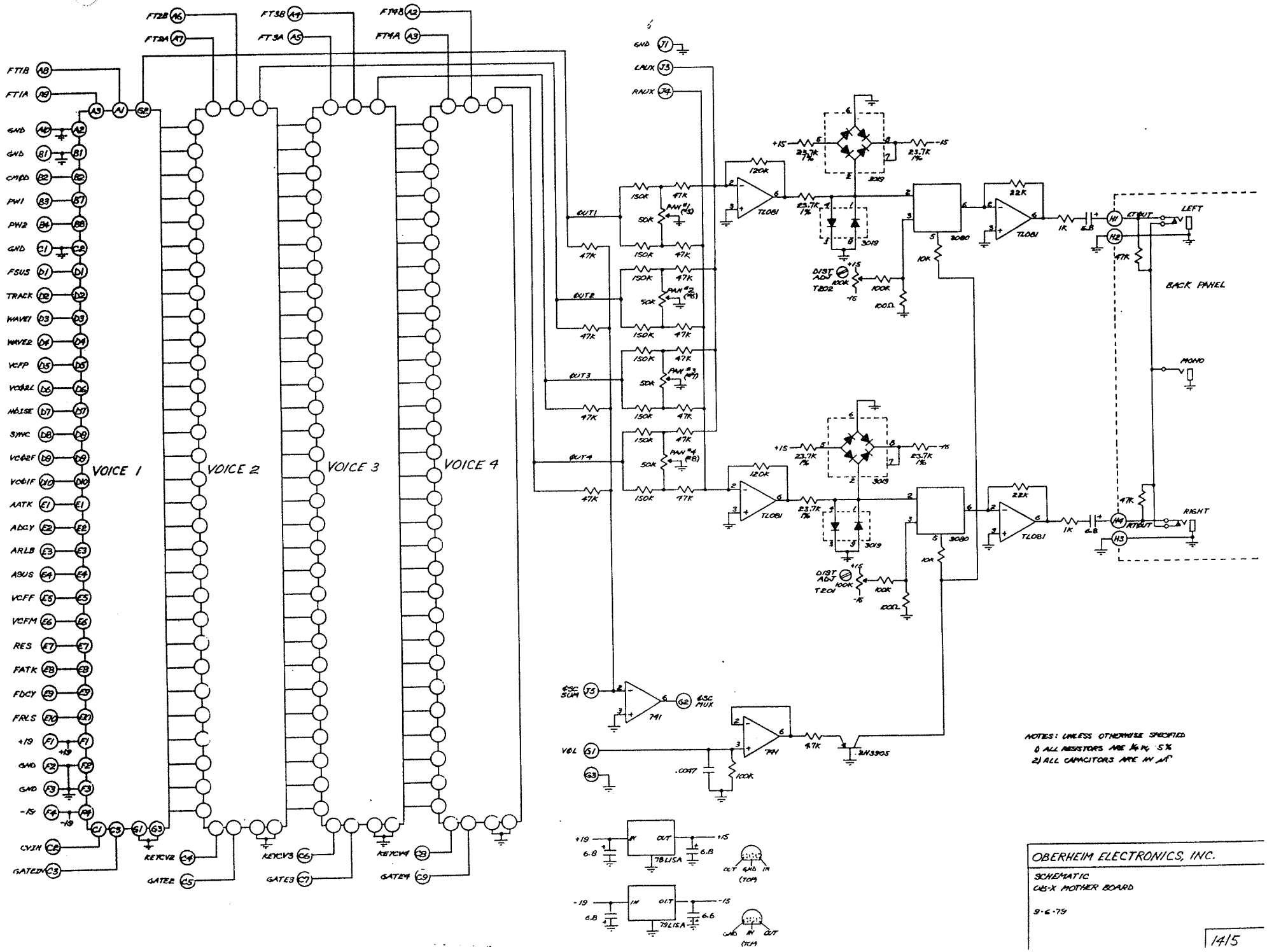

OBERHEIM ELECTRONICS, INC.

SCHEMATIC
CMS-X MOTHER BOARD

9-6-79

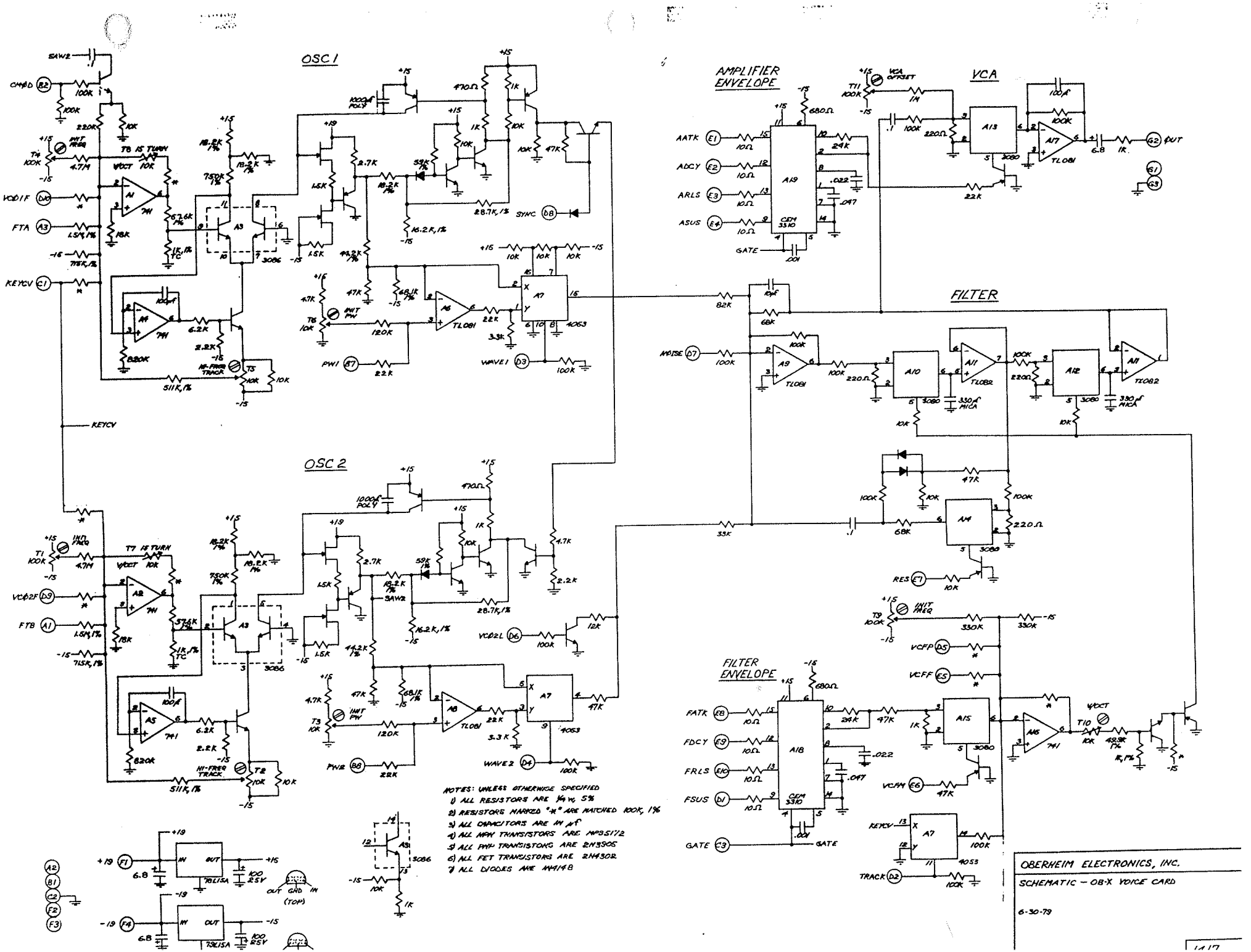
OSC 1
OSC 2
AMPLIFIER ENVELOPE
VCA
FILTER
FILTER ENVELOPE
SAW2
CMPD
VCO1F
FTA
KEYCV
PW1
WAVE1
SYNC
AATK
ADCY
ARLS
ASUS
GATE
NOISE
RES
VCFP
VCFF
VCFM
FATK
FDCY
FRLS
FSUS
TRACK
OUT
NOTES: UNLESS OTHERWISE SPECIFIED
1) ALL RESISTORS ARE ¼ W, 5%
2) RESISTORS MARKED "*" ARE MATCHED 100K, 1%
3) ALL CAPACITORS ARE IN μF
4) ALL NPN TRANSISTORS ARE MPS5172
5) ALL PNP TRANSISTORS ARE 2N3905
6) ALL FET TRANSISTORS ARE 2N4302
7) ALL DIODES ARE IN4148
OBERHEIM ELECTRONICS, INC.
SCHEMATIC – OB-X VOICE CARD
6-30-79

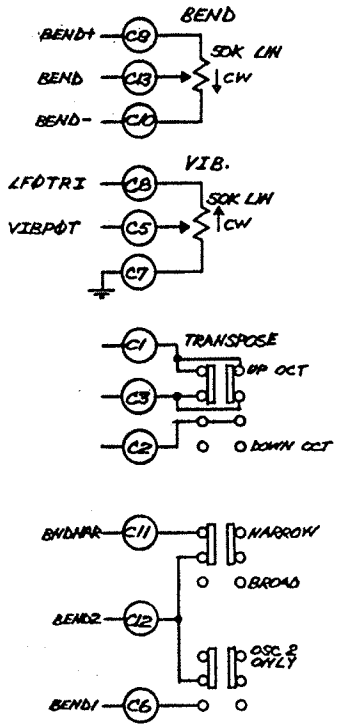

OBERHEIM ELECTRONICS, INC.

SCHEMATIC - OB-X BEND ASSEMBLY

6-30-79

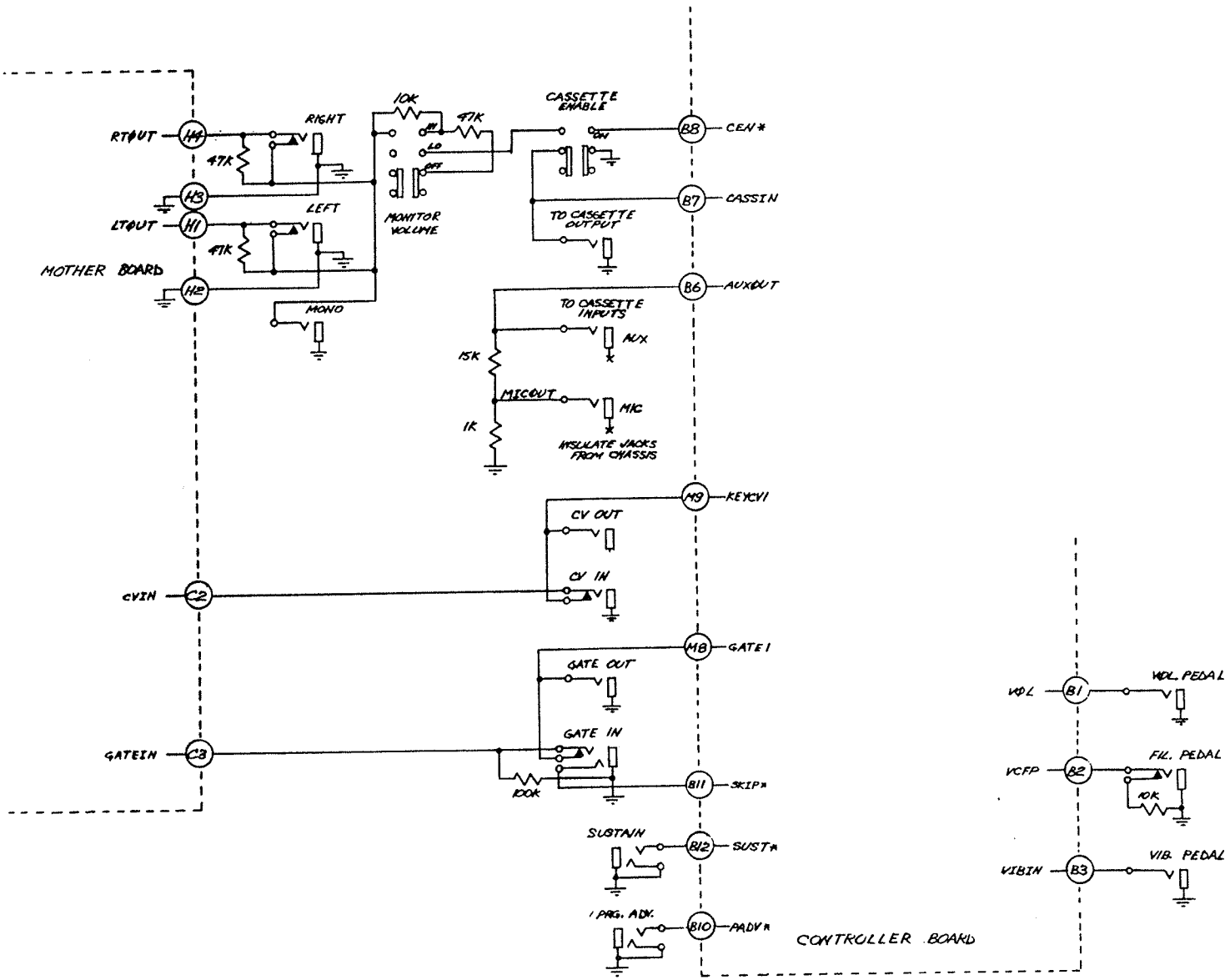

OBERHEIM ELECTRONICS, INC.

SCHEMATIC - OS-X REAR PANEL

9-6-79

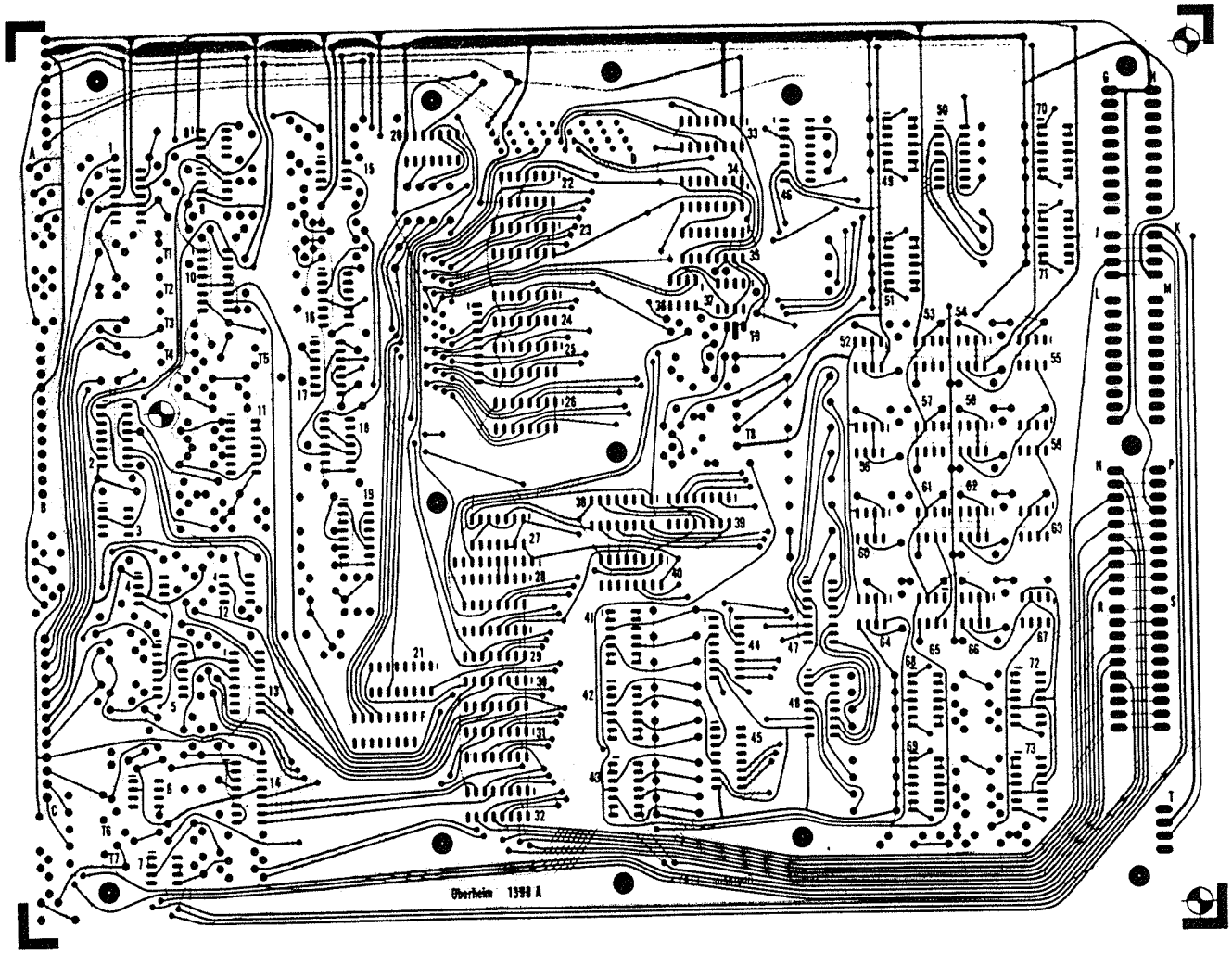

OBERHEIM ELECTRONICS, INC.

SCALE:	APPROVED BY:	DRAWN BY
DATE: 9-21-79		REVISED

OB-X CONTROL BOARD P.C. ARTWORK
COMPOSITE

DRAWING NUMBER

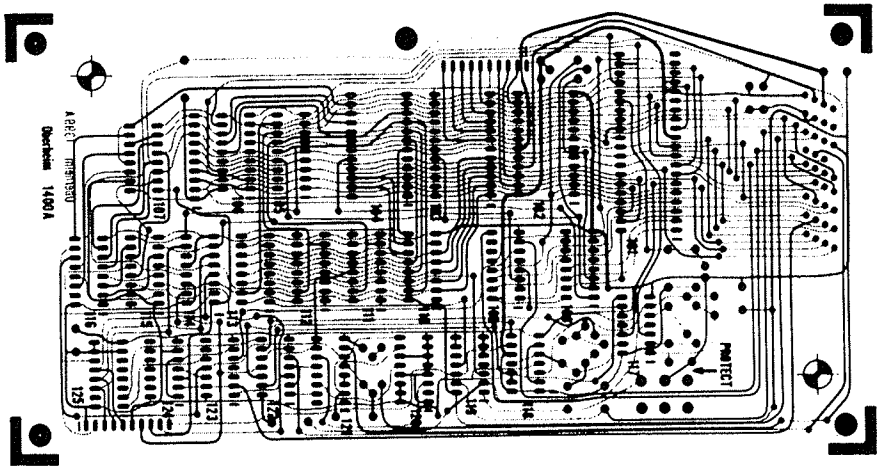

OBERHEIM ELECTRONICS, INC.		
SCALE:	APPROVED BY:	DRAWN BY
DATE 9-21-79		REVISED
OB-X PROCESSOR BOARD P.C. ARTWORK COMPOSITE		
		DRAWING NUMBER

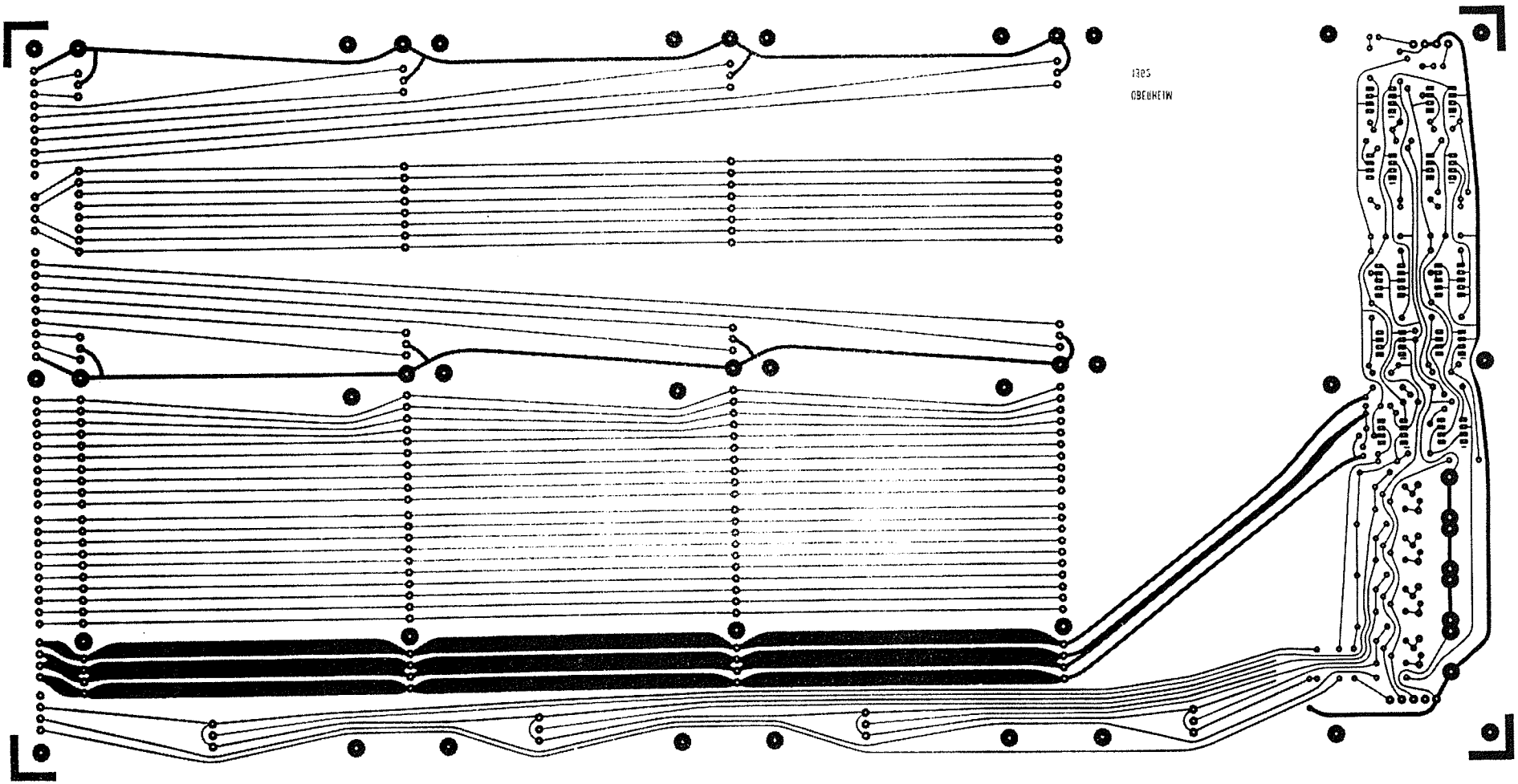

OBERHEIM ELECTRONICS INC.		
SCALE:	APPROVED BY:	DRAWN BY
DATE: 9-21-79		REVISED
OB-X MOTHER BOARD P.C. ARTWORK COMPOSITE		
		DRAWING NUMBER

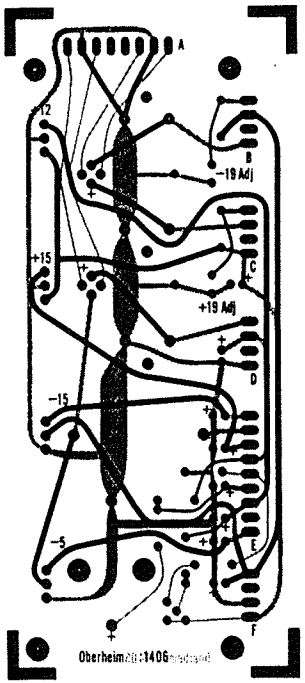

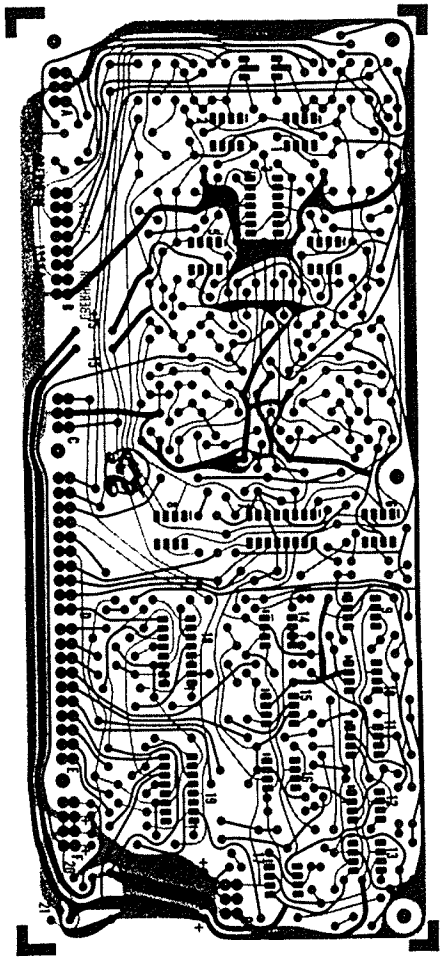

OBERHEIM ELECTRONICS, INC.		
SCALE:	APPROVED BY:	DRAWN BY
DATE: 9-21-79		REVISED
OB-X POWER SUPPLY & VOICE CARD P.C. ARTWORK COMPOSITES		
		DRAWING NUMBER

OBERHEIM ELECTRONICS, INC.

ENGINEERING CHANGE ORDER

ECO NO. 001

PRODUCT AFFECTED: OB-X

DRAWINGS AFFECTED: 1413 sheet 4 of 4

DESCRIPTION OF CHANGE

ON BENDER ELECTRONICS

WAS

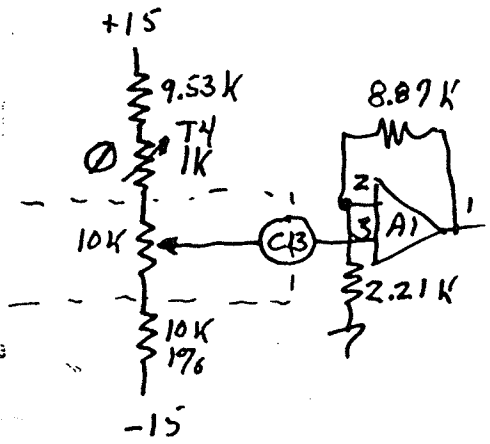

NOW

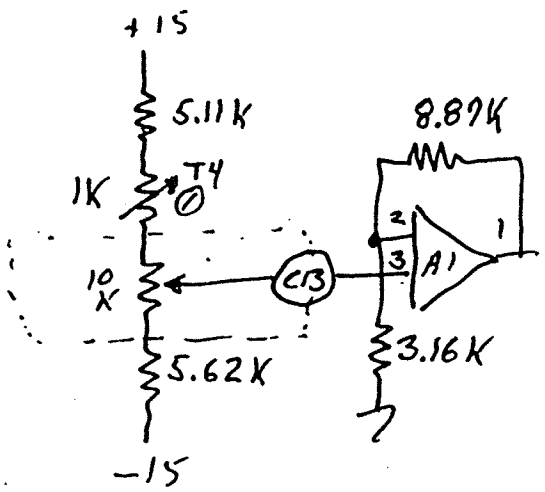

REASON FOR CHANGE: Increase adjustment Range of T4 on process/contrac

EFFECTIVITY

- [x] FUTURE PRODUCTION ONLY
- [ ] RETROFIT UNITS IN PRODUCTION AND INVENTORY
- [ ] RETROFIT UNITS IN FIELD
- [ ] DRAWING CORRECTION ONLY; HARDWARE NOT AFFECTED
- [ ] _____

WRITTEN BY: J Cooper DAT 9/

APPROVED BY: J Cooper DA 9/2

OBERHEIM ELECTRONICS, INC.

ENGINEERING CHANGE ORDER

ECO NO. 002

PRODUCT AFFECTED: OBX

DRAWINGS AFFECTED: 1413 INCORPORATED SW 793804

DESCRIPTION OF CHANGE

I) Change .022 µfd mylar capacitors attached to pins 5 and 10 of IC41 to .047µfd mylar.

II) Change 47pf disk capacitor attached to pin 1 of A35 to 30pf disk.

III) Change the "H1" Eprom to "HA1" type

REASON FOR CHANGE: Improve Auto Tune performance

EFFECTIVITY

- ☐ FUTURE PRODUCTION ONLY
- ☑ RETROFIT UNITS IN PRODUCTION AND INVENTORY
- ☑ RETROFIT UNITS IN FIELD
- ☐ DRAWING CORRECTION ONLY; HARDWARE NOT AFFECTED
- ☐ _____

WRITTEN BY: J Cogan DAT 9/20/

APPROVED BY: DAT 9/26/

OBERHEIM ELECTRONICS, INC.

ENGINEERING CHANGE ORDER

ECO NO. 003

PRODUCT AFFECTED	DRAWINGS AFFECTED	INCORPORATE IN
OBX	1413	SN 793804

DESCRIPTION OF CHANGE

I) Change The 10K Resistor attached To pin 26 of A101 To 100K.

II) change the 4.7K Resistor attached To connector pin M8 To 3.3K

REASON FOR CHANGE

I) MAKE POWER-ON RESET LONGER

II) INCREASE GATE OUT VOLTAGE FOR COMPATIBILITY WITH DS-2A

EFFECTIVITY

- [ ] FUTURE PRODUCTION ONLY
- [x] RETROFIT UNITS IN PRODUCTION AND INVENTORY
- [ ] RETROFIT UNITS IN FIELD
- [ ] DRAWING CORRECTION ONLY; HARDWARE NOT AFFECTED
- [ ] _____

WRITTEN BY	DAT
J Cooper	9/20/1?

APPROVED BY	DAT
Mark Oberheim	9/24

OBERHEIM ELECTRONICS, INC.

ENGINEERING CHANGE ORDER

ECO NO. 004

RODUCT AFFECTED: OB-X

DRAWINGS AFFECTED: 1413

DESCRIPTION OF CHANGE

change the eight .022μfd mylar capacitors attached to IC A47 to .022μfd polystyrene, polycarbonate, or polypropelene.

REASON FOR CHANGE

Improve Auto Tune performance

EFFECTIVITY

- [x] FUTURE PRODUCTION ONLY
- [ ] RETROFIT UNITS IN PRODUCTION AND INVENTORY
- [ ] RETROFIT UNITS IN FIELD
- [ ] DRAWING CORRECTION ONLY; HARDWARE NOT AFFECTED
- [ ] _____

WRITTEN BY: J Cogan DA 9/20

APPROVED BY: [signature] DA 9/26

OBERHEIM ELECTRONICS, INC.

ENGINEERING CHANGE ORDER

ECO NO. 005

PRODUCT AFFECTED

OB-X

DRAWINGS AFFECTED

1413 sheet 3 of 4

DESCRIPTION OF CHANGE SERVICE NOTE FOR UNSTABLE KEY CV

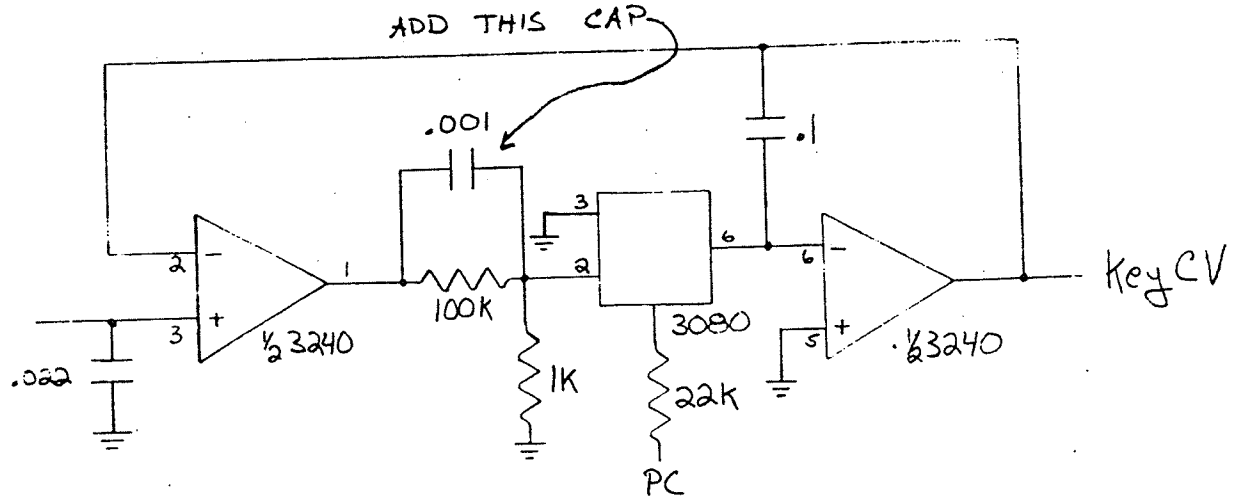

CHANGE ONLY IF NECESSARY

REASON FOR CHANGE Unstable keyboard control voltages, due to 3240's oscillating. Modification must be made to all key CV circuits. It is important to readjust DAC trimmer T9 on control board after modifying circuit.

EFFECTIVITY

- ☐ FUTURE PRODUCTION ONLY
- ☐ RETROFIT UNITS IN PRODUCTION AND INVENTORY
- ☐ RETROFIT UNITS IN FIELD
- ☐ DRAWING CORRECTION ONLY; HARDWARE NOT AFFECTED
- ☒ SERVICE NOTE

WRITTEN BY D

7-21-

APPROVED BY

9-

OSBORNE ELECTRONICS, INC.

ENGINEERING CHANGE ORDER

ECO NO.

007

PRODUCT AFFECTED

OB-X

DRAWINGS AFFECTED

14/16

DESCRIPTION OF CHANGE

Add Two IN4148 diodes as follows:

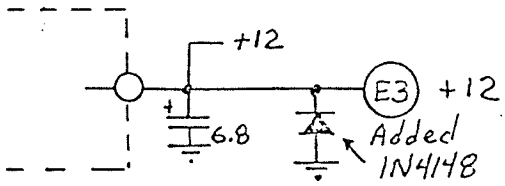

OB-1 P/S

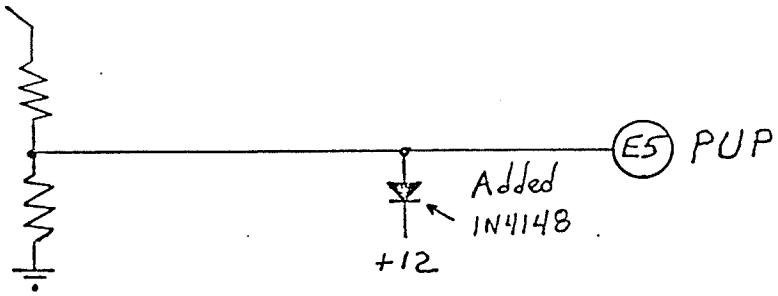

REASON FOR CHANGE

1) To prevent lock-up of +12 volt supply upon power up

2) To prevent PUP from being generated if +12 volt supply fails

EFFECTIVITY

[X] FUTURE PRODUCTION ONLY

[ ] RETROFIT UNITS IN PRODUCTION AND INVENTORY

[ ] RETROFIT UNITS IN FIELD

[ ] DRAWING CORRECTION ONLY; HARDWARE NOT AFFECTED

[ ] _____

WRITTEN BY J Cooper DATE 10/17/79

APPROVED BY [signature] DATE 10/17/7

CONTROL		POWER SUPPLY
A1	-5V	E1
A2	(KEY)	E2
A3	+12V	E3
A4	+5MEM	E4
A5	PUP	E5
A6	+5V	E6
A7	+15V	E7
A8	GND	E8
A9	-15V	E9

CONTROL		REAR PANEL
B1	VOL	VOLUME PEDAL JACK--TIP
B2	VCFP	FILTER PEDAL JACK--TIP
B3	VIBIN	VIBRATO PEDAL JACK--TIP
B4	(NC)	
B5	(KEY)	
B6	AUXOUT	TO CASS AUX INPUT JACK--TIP
B7	CASSIN	TO CASS OUTPUT JACK--TIP
B8	CEN*	CASSETTE ENABLE SWITCH--ON
B9	GND	
B10	PADV*	PROGRAM ADVANCE JACK--TIP
B11	SKIP*	GATE IN JACK--RING
B12	SUST*	SUSTAIN FOOTSWITCH JACK--TIP

CONTROL		MODULATION ASSEMBLY
C1	TRUP	TRANSPOSE SWITCH--UP
C2	TRDN	TRANSPOSE SWITCH--DOWN
C3	TRANSP	TRANSPOSE SWITCH--CENTER
C4	(KEY)	
C5	VIBPOT	VIBRATO POT--WIPER
C6	BEND1	BEND OSC SWITCH--BOTH
C7	GND	
C8	LFOTRI	VIBRATO POT--CW END
C9	BEND+	BEND POT--CCW END
C10	BEND-	BEND POT--CW END
C11	BNDNAR	BEND RANGE SWITCH--NARROW
C12	BEND2	BEND OSC & RANGE SW'S--CENTER
C13	BEND	BEND POT--WIPER

CONTROL		PROCESSOR
D1	A4	1
D2	A5	2
D3	A6	3
D4	A1	4
D5	A2	5
D6	A3	6
D7	AOA	7
D8	A9	8
D9	A8	9
D10	A7	10
D11	D7	11
D12	D6	12
D13	D5	13
D14	D4	14
D15	D3	15
D16	D2	16
D17	D1	17
D18	DO	18
D19	IOR*	19
D20	IOW*	20
D21	CEN*	21
D22	(NC)	22
D23	ATRST	23
D24	(NC)	24
D25	OSCMUX	25
D26	PUP	26
D27	CASCLK	27
D28	(NC)	28
D29	+5MEM	29
D30	GND	30
D31	(NC)	31
D32	+12V	32
D33	-5V	33
D34	+5V	34

CONTROL		POT NO. 1
E1	LR07	1
E2	LR06	2
E3	LR05	3
E4	LR04	4
E5	LR03	5
E6	LR02	6
E7	LR01	7
E8	LR00	8
E9	GND (ANLG)	9
E10	ANLGIN	10
E11	GND	11
E12	VOLPOT	12
E13	MTUN	13
E14	GND	14
E15	SWEND*	15
E16	-15V	16
E17	+15V	17
E18	SWENE*	18
E19	CEN*	19
E20	+5V	20
E21	SWD6*	21
E22	SWD7*	22
E23	SWD2*	23
E24	SWD1*	24
E25	SWD5*	25
E26	SWD0*	26
E27	SWD4*	27
E28	SWD3*	28
E29	AR5	29
E30	AR4	30
E31	AR3	31
E32	AR2	32
E33	AR1	33
E34	AR0	34

CONTROL		KEYBOARD
F1	SWEN1*	A1
F2	SWEN3*	A2
F3	SWEN5*	A3
F4	SWEN7*	A4
F5	SWD1*	A5
F6	SWD2*	A6
F7	SWD7*	A7
F8	SWD6*	A9
F9	SWD5*	B15
F10	SWD0*	B14
F11	SWD4*	B1
F12	SWD3*	B2
F13	SWEN6*	B3
F14	SWEN4*	B4
F15	SWEN2*	B6
F16	SWEN0*	B7

CONTROL		MOTHER NO. 2
G1	GND	A10
G2	FT5A	A9
G3	FT5B	A8
G4	FT6A	A7
G5	FT6B	A6
G6	FT7A	A5
G7	FT7B	A4
G8	FT8A	A3
G9	FT8B	A2
G10	(NC)	A1

CONTROL		MOTHER NO. 1
H1	GND	A10
H2	FT1A	A9
H3	FT1B	A8
H4	FT2A	A7
H5	FT2B	A6
H6	FT3A	A5
H7	FT3B	A4
H8	FT4A	A3
H9	FT4B	A2
H10	(NC)	A1

CONTROL		MOTHER NO. 2
J1	PW2	B4
J2	PW1	B3
J3	CMOD	B2
J4	GND	B1

CONTROL		MOTHER NO. 1
K1	PW2	B4
K2	PW1	B3
K3	CMOD	B2
K4	GND	B1

CONTROL		MOTHER NO. 2
L1	(NC)	C10
L2	GATE8	C9
L3	KEYCV8	C8
L4	GATE7	C7
L5	KEYCV7	C6
L6	GATE6	C5
L7	KEYCV6	C4
L8	GATE5	C3
L9	KEYCV5	C2
L10	GND	C1

CONTROL		MOTHER NO. 1
M1	(NC)	C10
M2	GATE4	C9
M3	KEYCV4	C8
M4	GATE3	C7
M5	KEYCV3	C6
M6	GATE2	C5
M7	KEYCV2	C4
M10	GND	C1

CONTROL		REAR PANEL
M8	GATE1	GATE OUT JACK--TIP
M9	KEYCV1	CV OUT JACK--TIP

REAR PANEL		MOTHER NO. 1
GATE IN JACK--TIP	GATEIN	C3
CV IN JACK--TIP	CVIN	C2

CONTROL		MOTHER NO. 2
N1	VCO1F	D10
N2	VCO2F	D9
N3	SYNC	D8
N4	NOISE	D7
N5	VCO2L	D6
N6	VCFP	D5
N7	WAVE2	D4
N8	WAVE1	D3
N9	TRACK	D2
N10	FSUS	D1

CONTROL		MOTHER NO. 1
P1	VCO1F	D10
P2	VCO2F	D9
P3	SYNC	D8
P4	NOISE	D7
P5	VCO2L	D6
P6	VCFP	D5
P7	WAVE2	D4
P8	WAVE1	D3
P9	TRACK	D2
P10	FSUS	D1

CONTROL		MOTHER NO. 2
R1	FRLS	E10
R2	FDCY	E9
R3	FATK	E8
R4	RES	E7
R5	VCFM	E6
R6	VCFF	E5
R7	ASUS	E4
R8	ARLS	E3
R9	ADCY	E2
R10	AATK	E1

CONTROL		MOTHER NO. 1
S1	FRLS	E10
S2	FDCY	E9
S3	FATK	E8
S4	RES	E7
S5	VCFM	E6
S6	VCFF	E5
S7	ASUS	E4
S8	ARLS	E3
S9	ADCY	E2
S10	AATK	E1

CONTROL		MOTHER NO. 1
T1	(NC)	G4
T2	GND	G3
T3	OSCMUX	G2
T4	VOL	G1

POWER SUPPLY		TRANSFORMER
A1	26VAC	5
A2	GND (CT)	6
A3	26VAC	7
A4	(KEY)	
A5	(NC)	
A6	10VAC	8
A7	GND (CT)	9
A8	10VAC	10

POWER SUPPLY		LM337K
B1	-32V	CASE
B2	(KEY)	
B3	-19V	2
B4	ADJ	1

POWER SUPPLY		LM317K
C1	+19V	CASE
C2	(KEY)	
C3	+32V	2
C4	ADJ	1

POWER SUPPLY		LM340K
D1	GND	CASE
D2	(KEY)	
D3	+5V	2
D4	+12V	1

POWER SUPPLY		MOTHER NO. 1	
F1	+19V	F1	CONTAINED
F2	GND	F2	
F3	(KEY)	F3	IN A
F4	-19V	F4	
			SINGLE
MOTHER NO. 1		MOTHER NO. 2	
F1	+19V	F1	CABLE
F2	GND	F2	
F3	(KEY)	F3	
F4	-19V	F4	

POT NO. 1		POT NO. 2
A1	-15V	A1
A2	+15V	A2
A3	PORT	A3
A4	LFOPOT	A4
A5	FMPOT	A5
A6	PWMPOT	A6
A7	DETUNE	A7
A8	+5POT	A8

POT NO. 1		POT NO. 2
B1	GND	B1
B2	VOLPOT	B2
B3	MTUN	B3
B4	SWEND*	B4
B5	LEDC0*	B5
B6	SWENA*	B6
B7	LEDC1*	B7
B8	SWENB*	B8

POT NO. 1		POT NO. 2
C1	SWD0*	C1
C2	SWD1*	C2
C3	SWD2*	C3
C4	SWD3*	C4
C5	SWD4*	C5
C6	SWD5*	C6
C7	SWD6*	C7
C8	SWD7*	C8

POT NO. 1		POT NO. 2
D1	LEDR0	D1
D2	LEDR1	D2
D3	LEDR2	D3
D4	LEDR3	D4
D5	LEDR4	D5
D6	LEDC6*	D6
D7	LEDC7*	D7
D8	SWEN9*	D8

MOTHER NO. 1		REAR PANEL
H1	LTOUT	LEFT OUTPUT JACK--TIP
H2	SHIELD	LEFT OUTPUT JACK--SLEEVE
H3	SHIELD	RIGHT OUTPUT JACK--SLEEVE
H4	RTOUT	RIGHT OUTPUT JACK--TIP

MOTHER NO. 1		MOTHER NO. 2
J1	GND	J1
J2	(NC)	J2
J3	LAUX	J3
J4	RAUX	J4
J5	OSCSUM	J5